FIRE ALARM SYSTEM
Plan Submittal and Inspection Requirements

All fire alarm systems installed within the jurisdiction of the San Mateo Fire Department shall meet all the applicable sections of the following current codes: California Code of Regulation Title 19; California Code of Regulations Title 24, Part 2 and Part 9 - California Building Code, California Fire Code; California Electrical Code; NFPA Standard 72 - National Fire Alarm Code, and the City of San Mateo. *All installation work shall be done by a contractor who possesses a valid C-10 or C-07 California Contractor's License.* Please contact the Bureau of Fire Protection and Life Safety at **(650) 522-7940** with any questions or to schedule an inspection.

1. Submittal Requirements

Plans shall be submitted to the City of San Mateo Building Division, 330 W. 20th Avenue, San Mateo. All Fire Alarm System Plan Submittals shall include:

A. A completed Permit Application

B. Four (4) complete sets of the required plans, specifications, and calculations meeting the City of San Mateo Fire Alarm Design Criteria. (Refer to Plan Submittal Requirement Checklist).

NOTE: If the installing contractor is not the designer of the system, the plans will be required to be stamped and wet signed by the Licensed System Design Engineer.

C. Payment of Fees. A plan check and permit fee will be charged for each submittal. Please remit payment in full at the time of submittal.

NOTE: Failure to provide all of the requested information will result in unnecessary delays in the plan review process.

2. Approval of Plans

The approved permit application entitles the applicant to one (1) inspection of the rough wiring installation prior to cover; one (1) 24 hour Standby Battery Test; one (1) **final** inspection, at which time all initiating and signaling devices will be tested; and one (1) reinspection. It is the **installer's responsibility** to perform sufficient pre-inspection testing to ensure operational integrity and reliability of the system in order to avoid delays at the time of the final inspection.

The approved plans, specifications, calculations, and permit shall remain on the job site at all times. Failure to provide the approved plans or permit at the time of inspection will result in a failed inspection and a reinspection fee will be assessed.

3. Pre-Testing and Inspections

A. San Mateo Fire Department Witnessed 100% Test

1. On the day of the test the installing contractor shall provide the following:
   a) Minimum of two (2) personnel
   b) Sound (db) Meter
   c) Voltage Meter
   d) Ladder
   e) 2 Portable Radios
   f) Appropriate tools for removing, testing, activating, etc., any fire alarm device
   g) Reset instructions made of a durable material shall be affixed to the fire alarm panel.
   h) Reduced size and legible device plan indication device locations.
   i) Approved plans and/or revised plans with permit card
   j) NFPA 72-written “Record of Completion” document.

NOTE: Scheduling of inspections shall be requested a minimum of 48 hours in advance by calling he Bureau of Fire Protection and Life Safety at (650) 522-7940.

4. City of San Mateo Fire Alarm Design Criteria

1. The fire alarm system shall meet the requirements of NFPA 72 and the San Mateo Fire Department.
2. Identify the type of fire alarm system per the current California Building Code and/or California Fire Code and NFPA 72.
3. Visual devices shall be installed in interior corridors and small common rooms.
4. Visual and Audible shall be installed in all common areas.
5. All alarm devices, junction boxes, and modules exposed to the weather or installed in below grade areas (i.e. parking garages, utility areas, etc.) shall be listed for use in a weather/water environment. All installed per the manufacturers' recognized weather/water tight manner. There are no exceptions.
6. All penetrations of any fire rated assemblies shall be repaired with a listed system. Provide the listed penetration details on the plans.
7. Residential single station smoke detectors required by CBC shall not be connected to the building fire alarm system.
8. The fire alarm system shall be addressable as to the type of device and zoned per floor.
9. All fire alarm systems shall be capable of and audibility level of 15 db over ambient. For residential units the minimum ambient sound level shall be 35 dba.
10. Off-site monitoring shall be capable of identifying the following signals: Automatic fire alarm, trouble alarm, and supervisory alarm independently. Supervisory alarms shall also be independently identified per fire sprinkler controls, fire pumps, fire dampers, duct detectors, and type of device.
11. Provide certification and contract for off-site monitoring company.
12. Provide all test documentation per NFPA 72.
13. Any repairs or the replacement of a fire alarm panel shall be considered a new fire alarm system and subject to all the testing requirements for a new fire alarm system.

5. Plan Submittal Requirement Checklist

A TYPICAL FIRE ALARM SYSTEM PLAN SUBMITTAL WILL INCLUDE FOUR (4) COMPLETE SETS OF THE FOLLOWING ITEMS (A thru P): Check off completed items. **Failure to provide the required information <u>will</u> result in the delay of your plan review.**

☐ A) Signed Pre-Submittal Agreement

☐ B) Title Sheet (refer to Exhibit A) which includes
- ☐ 1. Address of project (including suite number).
- ☐ 2. Name and Address of Owner.
- ☐ 3. Name and Address of Tenant.
- ☐ 4. Name and Address of Project Engineer and/or Architect.
- ☐ 5. Name and Address of System Designer and/or Installing Contractor.
- ☐ 6. Scope of Work. Detail the exact nature of the work in a clear, concise, and simple to understand language including the intent of the fire alarm system.

☐ C) Floor Plan (refer to Exhibit B), which includes:
- ☐ 1. Device locations
- ☐ 2. Type of device
- ☐ 3. Controls location
- ☐ 4. Conduit connection and size
  - ☐ a) Surface mounting installation
  - ☐ b) Semi-flush mounting installation
  - ☐ c) Flush mounting installation
- ☐ 5. Type and size of wire or cable
- ☐ 6. Exterior mounted devices (Weatherproof Fixture with listed back boxes)
- ☐ 7. Matrix indicating sequence of operation.

- ☐ D) Point to Point System Wiring Diagram (refer to Exhibit C), which includes:
  - ☐ 1. Interconnection of identified devices
  - ☐ 2. Type of power feed to the control panel
  - ☐ 3. External connection of modules in control panel

- ☐ E) Symbol List and Equipment Identification on Drawing (refer to Exhibit D), which includes:
  - ☐ 1. Symbols to be used on drawings
  - ☐ 2. Symbol description
  - ☐ 3. Model number and manufacturer's name

- ☐ F) Riser Diagram (refer to Exhibit E), which includes:
  - ☐ 1. Single line interconnection of devices
  - ☐ 2. Conductor quantity: either hash marks or number
  - ☐ 3. Initiating and indicating zone designations

- ☐ G) Signaling Circuit Load Consumption of Furthest Alarm Circuits on Drawing (refer to Exhibit F), which includes:
  - ☐ 1. Quantity of audio/visual indicating devices on furthest circuit and current consumption
  - ☐ 2. Length of furthest circuit and resistance of wire
  - ☐ 3. Formula on drawing and acceptable limit

- ☐ H) Manufacturer's Data Sheets on All System Components and Devices

- ☐ I) California State Fire Marshal's Listing Sheets for All System Components and Devices**.**

- ☐ J) Battery Calculation Sheet (refer to Exhibit G), which includes:
  - ☐ 1. Standby power consumption for all current drawing devices times the hours of required by the applicable NFPA Standard.
  - ☐ 2. Alarm power consumption of all current drawing devices times the minutes required by the applicable NFPA Standard.

- ☐ K) System Operating Instructions that includes:
  - ☐ 1. Step by step instruction for the operation of each type of initiating device in the system, including reset procedures.
  - ☐ 2. A copy of the reset instructions shall be made of a durable material and shall be permanent affixed to the fire alarm control panel.

- ☐ L) Design Details (refer to Exhibit H), which includes:
  - ☐ 1. Standards used for the design of the system
  - ☐ 2. Details on the occupancy type
  - ☐ 3. Construction type
  - ☐ 4. List of initiating and signaling zone assignments
  - ☐ 5. Detailed scope of work that identifies the intended system functions or assignments (i.e. system replacement, addition to an existing system, new system, etc.).
- ☐ M) Equipment List (refer to Exhibit I), which includes:
  - ☐ 1. Quantity of the devices
  - ☐ 2. Model Numbers and Description
  - ☐ 3. California State Fire Marshal Listing Number

- ☐ N) Completed NFPA 72 monitoring forms, which includes:
  - ☐ 1. Identify the type of monitoring, Central Station or Remote
  - ☐ 2. UL certification for installed equipment
  - ☐ 3. UL central station certification
  - ☐ 4. Copy of monitoring contract

☐ O) Identification of wire tagging method that conforms to the requirements of NFPA 72 and CEC section 760-10. All wiring into each device shall be identified. The wiring into a device shall indicate the origin or where it is coming from and the wiring leaving a device shall indicate the destination or where it is going. Each wire tag shall identify the device number, circuit number and the floor. (refer to Exhibit J)

☐ P) If utilizing any of the existing fire alarm components, written verification that the contractor has tested all existing components and the existing system is capable of handling the new work. The written verification shall include the Contractor's Name, address, phone number and Contractors License Number.

Exhibit A

TITLE SHEET

PROJECT	234 56th Avenue, Suite 123 San Mateo, California
OWNER	John R. Drawers 415 23rd Avenue, San Mateo
TENANT	DotCom Computers 1652 12th Avenue, San Mateo
ENGINEER	Thomas Sparks
CONTRACTOR	All Alert Fire Alarms Inc. Lic # 12345 C-10 Phone: (510) 462-5677 Fax: (510) 462-5678
FIRE ALARM EQUIPMENT SUPPLIER	Simplex Time Recorder Company
SCOPE OF WORK	Install new central station fire alarm system in an existing tenant space.

Exhibit B

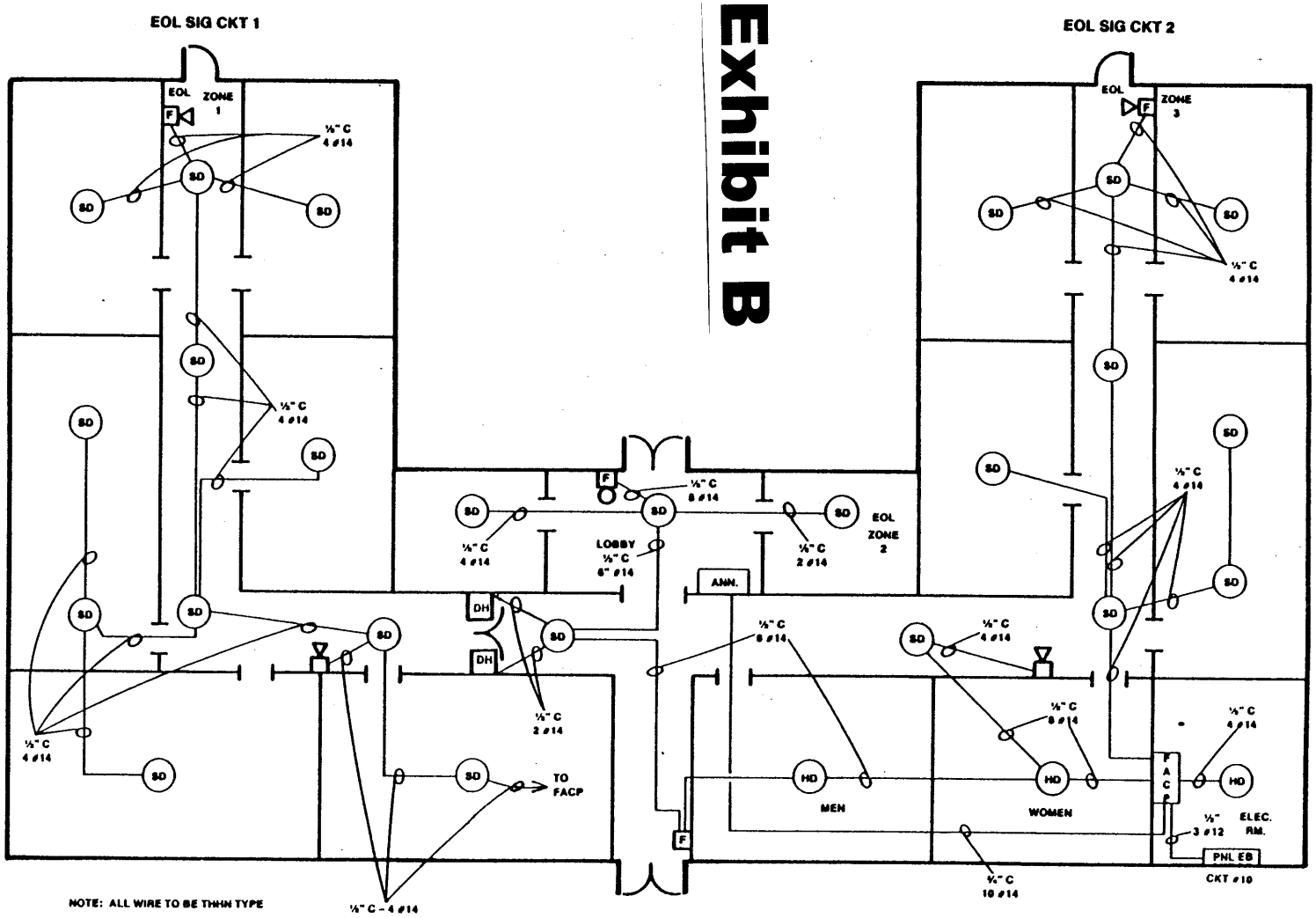

FLOOR PLAN

Exhibit C

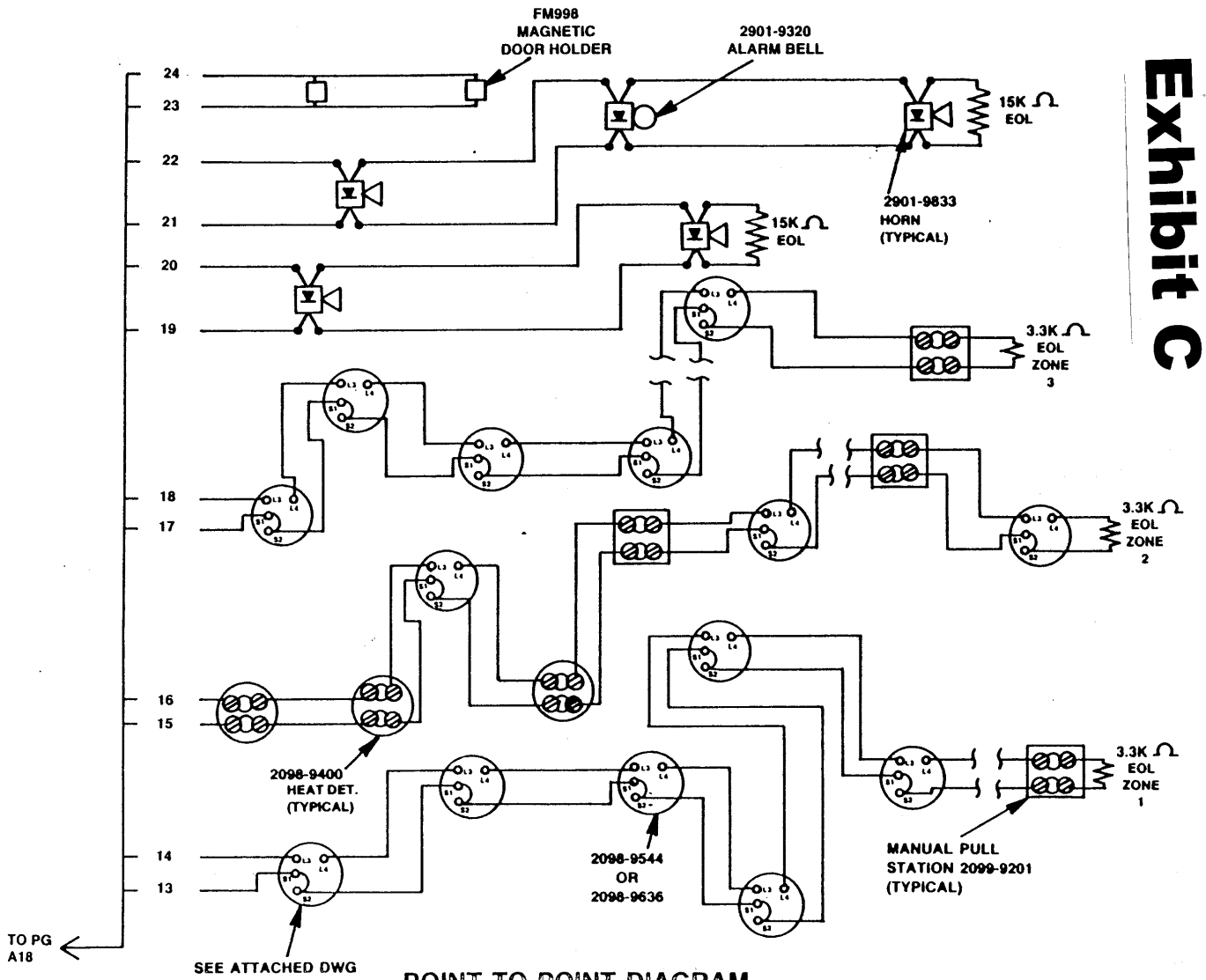

POINT TO POINT DIAGRAM

Exhibit D

SYMBOL	EQUIPMENT	MODEL NO.	STATE FIRE MARSHAL NO.
FACP	FIRE ALARM CONTROL PANEL	4001-9403	7165 – 026:147
ANN	ANNUNCIATOR	4601-9101	7120 – 026:148
F	MANUAL PULL STATION	2099-9201	7150 – 026:11
	FIRE ALARM HORNS	2901-9833	7135 – 026:139
	FIRE ALARM BELLS	2901-9321	7135 – 026:138
HD	HEAT DETECTOR	2098-9464	7270 – 026:43
SD	SMOKE DETECTOR W/701 BASE	2098-9636	7257 – 026:132
DH	DOOR HOLDER 24VDC	2088-9554	3550 – 047: 1

Exhibit E

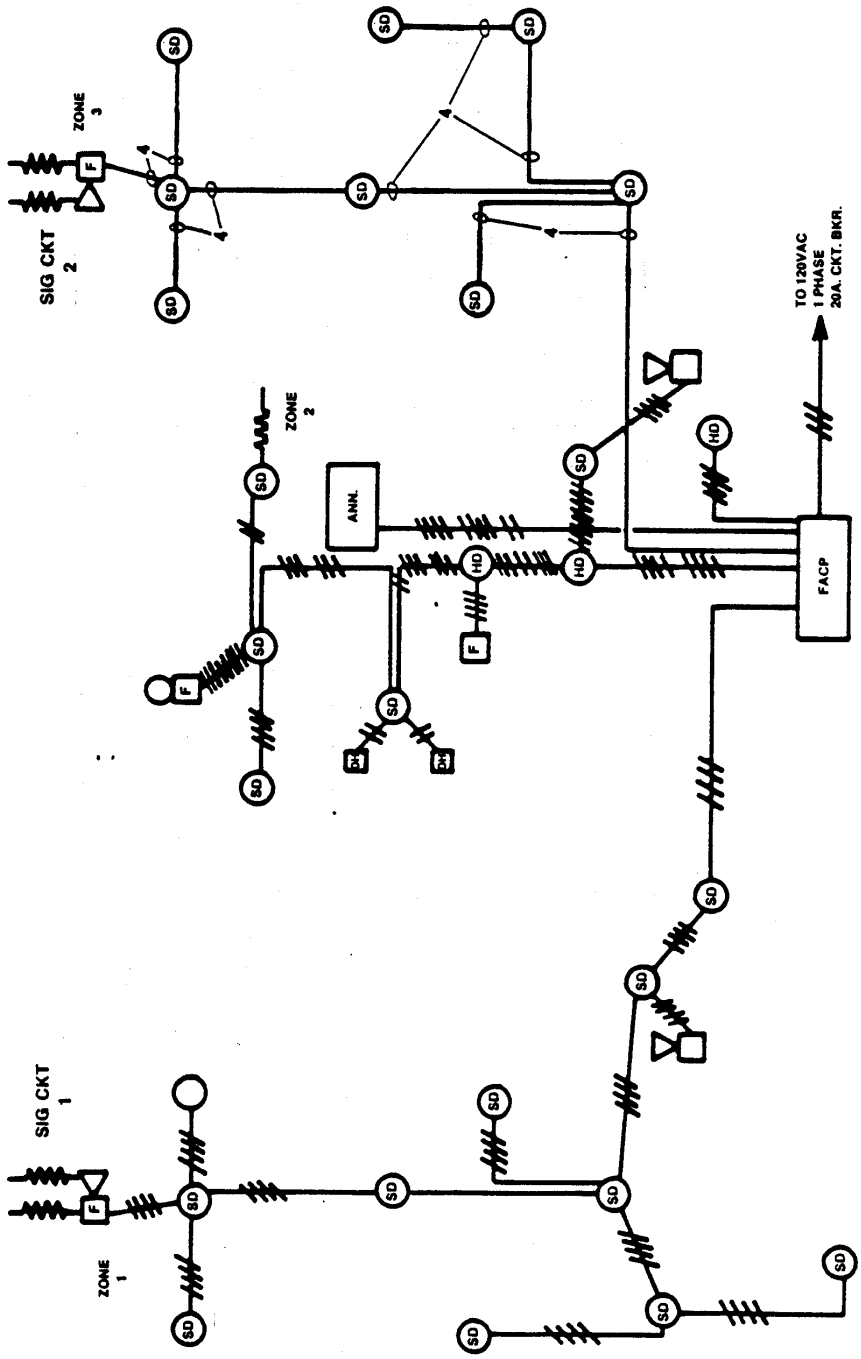

RISER DIAGRAM

Exhibit F

ACTUAL POINT TO POINT VOLTAGE DROP CALCULATION!

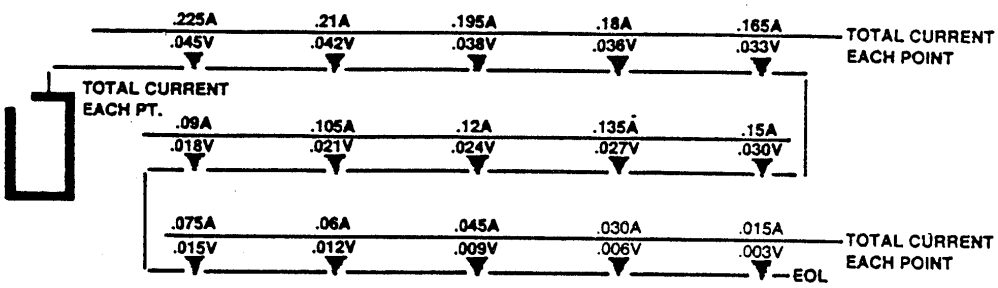

$$Vt = \frac{.359}{24VDC} = 1.49\%$$

▼ = MINI HORN @ .015 AMP ALARM CURRENT @ 24VDC

ASSUME 15 FEET BETWEEN HORNS OF 18-2 POWER LIMITED CABLE

(A x L x 21.36) ÷ CIRC MILS (1620)

VOLTAGE DROP IS TAKEN AT EACH DEVICE –
USE CURRENT TOTAL FOR DEVICES TO THAT POINT IN FORMULA
USE WIRE LENGTH ADDITIONAL BETWEEN EACH POINT:
IN THIS EXAMPLE WIRE LENGTH IS 15' STANDARD.

Exhibit G

Battery Calculations

for 24 ☐ 60 ☐ Hour Standby

Local and Propriety Alarm Systems
24 hours standby - 5 mins. of alarm

Auxiliary or Remote Service Station
60 hours standby - 5 mins. of alarm

EMERGENCY GENERATOR
YES ☐ NO ☐

Standby Condition/Tonealert Sounding

Control Module _____ @ _____ = _____ amps

Zone Module _____ @ _____ = _____ amps

Signal Module _____ @ _____ = _____ amps

Detectors _____ @ _____ = _____ amps

Other _____ @ _____ = _____ amps

_____ @ _____ = _____ amps

= _____ amps X _____ hours = _____ ah

Alarm Condition/Signal Sounding

Control Module _____ @ _____ = _____ amps

Zone Module _____ @ _____ = _____ amps

Signal Module _____ @ _____ = _____ amps

Detector(s) _____ @ _____ = _____ amps

Signals _____ @ _____ = _____ amps

Annunciator Lamps _____ @ _____ = _____ amps

Other _____ @ _____ = _____ amps

_____ @ _____ = _____ amps

= _____ amps X _____ hours = _____ ah

X (0.083) = _____

Total amp hours required = _____

Exhibit H

DESIGN DETAILS

Installation Standard	California Building Code, NFPA 72,
Type of Occupancy	B Office Space S-3 Garage A-3 Meeting Room
Type of Construction	Type V-N
Special Hazards or Considerations	None
Type of Fire Evacuation System	NFPA 72 per C.E.C Article 760 Part A, C
Type of Initiating Circuits	4 Zones - Class "B" Power Limited
Type of Indication Circuits	1 Zone - Class "B" Power Limited
Type of Supplementary Circuits	None
Conductor Information	Red for Indicating Circuits White for Initiating Circuits

Exhibit I

EQUIPMENT LIST

QUANTITY	MODEL#	DESCRIPTION	CSFM#	MOUNTING REQUIREMENTS
5	4001-9401	Fire Control Panel	7165-026:147	Surface mounted in the Elec. Room
10	2903-9101	Audio/Visual horn	7135-026:115	Surface mounted in 2975-9145 backbox
10	2975-9145	Backbox for above horn		
40	2099-9201	Manual Pull Station	7150-026:11	Semi-Flush mount on a single gang ring
136	2901-9836	Mini Horn	7135-569:105	Flush mounted on a single gang ring
10	2901-9833	Vibrating horn	7135-026:139	Mounts in 2975-9145 audio/Visual backbox
1700 ft. CL3		Fire Cable	7160-1236:103	Installed within the walls

Exhibit J

Fire Alarm Circuit
Identification - Wire Tags
Conforms to CEC/NEC Article 760-10

*Each device shall have an identification number.
*All wires shall have tags at each termination/connection point.

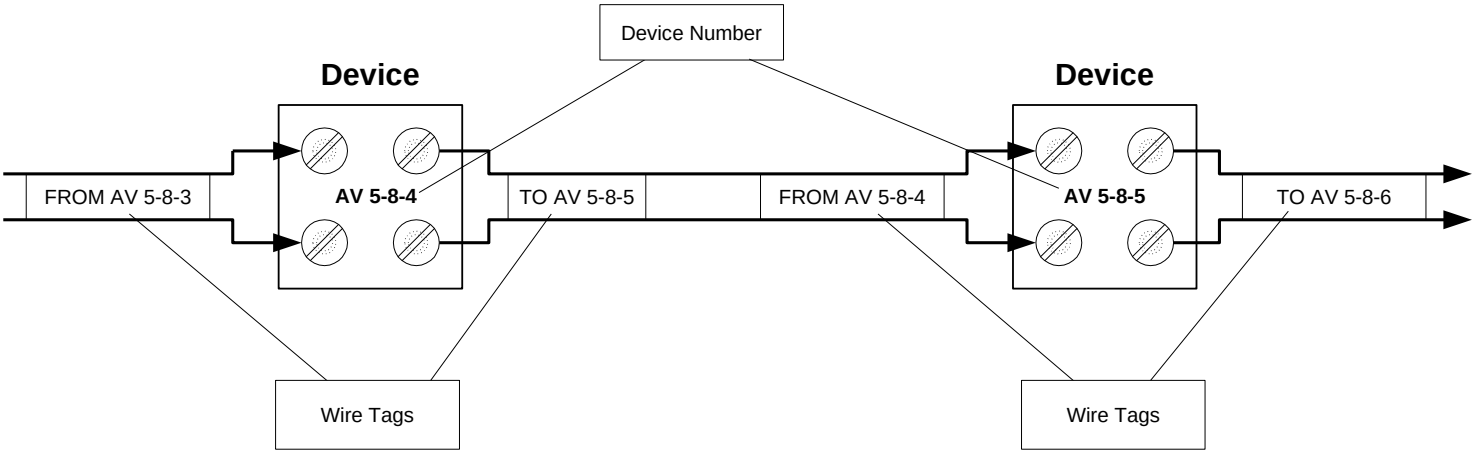
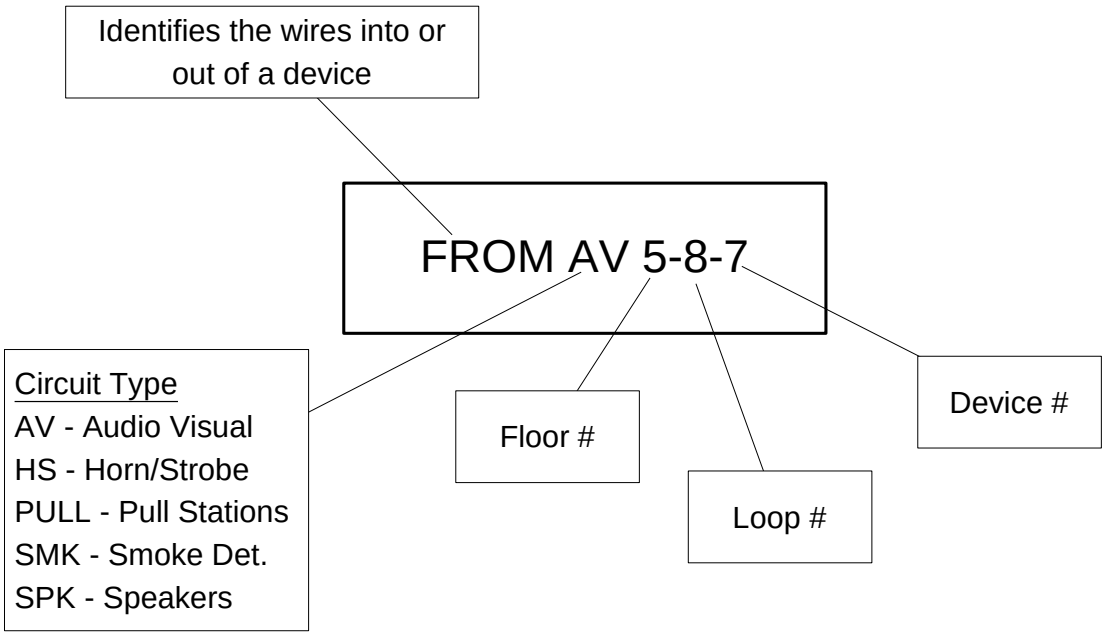
Wire Tag Nomenclature